MOEN®

SPECIFICATIONS

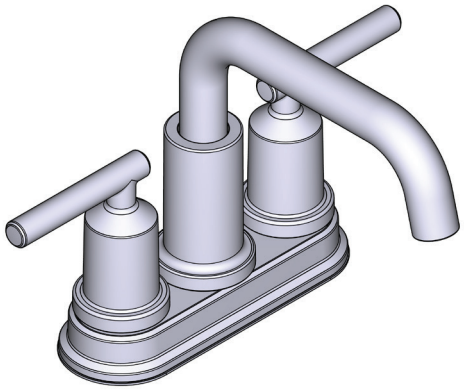

BREESE™

Two-Handle Low ARC Centerset Lavatory Faucet

MODELS: 84519 Series

WaterSense Meets EPA Criteria
Certified by IAPMO R&T

DESCRIPTION
- Metal construction with various finishes identified by suffix
- 1/2" IPS connections for flexible hoses only; not for use with rigid or semi-rigid supply risers (3/8" Copper or Pex) with coupling nuts
- Installation through 3 holes, 1"min.diameter, and 4" on center
- Includes non-metal push-down waste assembly

OPERATION
- Lever style handles
- Maximum handle rotation angle is 90° to full on
- Hot side counterclockwise to open (clockwise to close)
- Cold side clockwise to open (counter-clockwise to close)
- Rotating spout

FLOW
- Water usage is limited to these maximum flow rates as indicated by corresponding product markings
- 1.2 gpm max (4.5 L/min) at 60 psi

CARTRIDGE
- 1224 cartridge
- Nonmetallic and stainless steel material

STANDARDS
- Third party certified at WaterSense®, ASME A112.18.1/CSA B125.1, and all applicable requirements referenced therein including NSF 61/9 & 372
- Products marked with 1.2 gpm are compliant with California water efficiency regulations
- Complies with California Proposition 65 and with the Federal Safe Drinking Water Act
- ADA for lever handles

WARRANTY
- Lifetime limited warranty against leaks, drips and finish defects to the original homeowner
- 10 years warranty when used in a multifamily installation
- 5 years warranty when used in a commercial installation

Visit www.moen.com/support for complete details and limitations

CARTRIDGE
- Thin and thick deck mounting hardware kits available

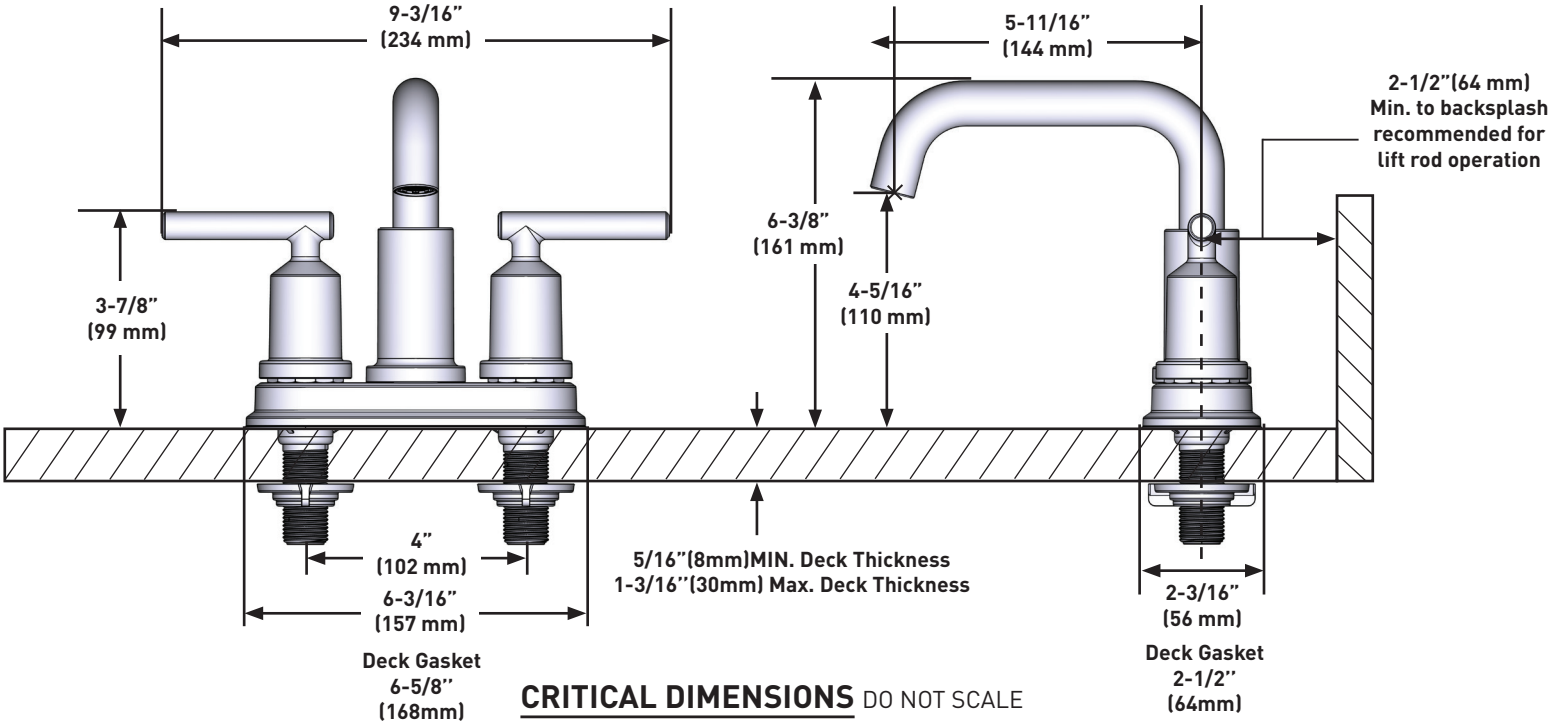

CRITICAL DIMENSIONS DO NOT SCALE